mares®

Smart Dive Computer

Instruction Manual

• TABLE OF CONTENTS

IMPORTANT WARNINGS **3**
DISCLAIMER 3
1. INTRODUCTION **3**
1.1. GLOSSARY 3
1.2. OPERATING MODES 4
1.3. USER-REPLACEABLE BATTERY 4
1.4. CONNECTING SMART TO A PC OR MAC 4
1.5. BUTTON OPERATION 4
1.6. WATCH DISPLAY 5
2. MENUS, SETTINGS AND FUNCTIONS **5**
2.1. CHRONO 6
2.2. PRE DIVE 6
2.3. MODE 6
2.4. SET 6
2.4.1. SET DIVE 7
2.4.1.1. LIGHT (BACKLIGHT) 7
2.4.1.2. P FACT (P FACTOR) 7
2.4.1.3. ALT (ALTITUDE) 7
2.4.1.4. WATR (WATER) 7
2.4.1.5. UNITS 8
2.4.1.6. FAST (FAST ASCENT) 8
2.4.1.7. ALRM (ALARMS) 8
2.4.1.8. ERASE (ERASE DESATURATION) 8
2.4.2. SET TIME 8
2.5. LOG (LOGBOOK) 8
2.6. PLAN (DIVE PLANNER) 9
2.7. PC 9
2.8. INFO 9
3. DIVING WITH SMART **9**
3.1. A FEW WORDS ABOUT NITROX 9
3.2. ALARMS 10
3.2.1. ASCENT RATE 10
3.2.2. MOD/PPO_2 10
3.2.3. CNS = 100% 10
3.2.4. MISSED DECOMPRESSION STOP 10
3.2.4.1. MISSED DECO STOP MODE 10
3.2.5. LOW BATTERY 11
3.3. DISPLAY INFORMATION 11
3.4. AFTER THE DIVE 12
3.5. DIVING WITH MORE THAN ONE GAS MIXTURE 12
3.5.1. SETTING MORE THAN ONE GAS 12
3.5.2. SWITCHING GAS 12
3.5.3. SPECIAL SITUATIONS 13
3.5.3.1. SWITCHING BACK TO A GAS MIXTURE WITH LOWER OXYGEN CONCENTRATION 13
3.5.3.2. SUBMERGING BELOW THE MOD AFTER A GAS SWITCH 13
3.6. BOTTOM TIMER MODE (BT) 13
3.6.1. DIVE VIOLATION INDUCED BOTTOM TIMER MODE 13
3.7. APNEA MODE 13
3.7.1. SETTINGS 13
3.7.2. USING SMART ON AN APNEA DIVE 14
3.7.2.1. SURFACING BETWEEN IMMERSIONS 14
3.7.3. LOGBOOK IN APNEA MODE 14
3.7.4. SWITCHING FROM APNEA TO SCUBA 14
4. TAKING CARE OF SMART **14**
4.1. TECHNICAL INFORMATION 14
4.2. MAINTENANCE 15
4.2.1. REPLACING THE BATTERY IN SMART 15
4.3. WARRANTY 16
4.4. WARRANTY EXCLUSIONS 16
4.5. HOW TO FIND THE PRODUCT SERIAL NUMBER 16
5. DISPOSAL OF THE DEVICE **16**

• IMPORTANT WARNINGS

No part of this document may be reproduced, stored in a retrieval system, or transmitted in any form without the written permission of Mares S.p.A.

Mares adopts a policy of continuing improvement, and therefore reserves the right to make changes and enhancements to any of the products described in this manual without notice.

Under no circumstances shall Mares be held responsible for any loss or damage sustained by third parties deriving from the use of this instrument.

⚠ WARNING

A dive computer is an electronic instrument and as such it is not immune to failure. To protect yourself against the unlikely event of a failure, in addition to the dive computer, also use a depth gauge, a submersible pressure gauge, a timer or watch, and dive tables.

⚠ WARNING

Do not dive if the display appears unusual or unclear.

⚠ WARNING

The dive computer must not be used in conditions that preclude its use (e.g.: low or no visibility, making it impossible to read the gauge).

⚠ WARNING

The dive computer cannot ensure against possible decompression sickness.

DISCLAIMER

This manual describes how to operate an instrument and it describes the information provided by the instrument during a dive. Neither this manual nor the instrument are a substitute for dive training, common sense and good diving practices.

How the information provided by the instrument is interpreted and put to use by the diver is not the responsibility of Mares. Read the manual carefully and make sure you understand completely how the instrument works and the information it provides during a dive, including information on depth, time, decompression obligations and all warnings and alarms. Unless you fully understand how the instrument works and the information it displays and unless you accept full responsibility for using this instrument, do not dive with it.

• 1. INTRODUCTION

1.1. GLOSSARY

AIR:	Air dive
⌛:	Symbolizes decompression stop violation.
⚠:	Symbolizes uncontrolled ascent and uncontrolled ascent violation.
ASC:	Total ascent time, the time it takes to perform the ascent from your current depth to the surface in a decompression dive, including all decompression stops and assuming an ascent rate of 10m/min or 33ft/min.
AVG:	Average depth, calculated from the beginning of the dive.
CNS:	Central Nervous System. CNS% is used to quantify toxic effects of oxygen.
DESAT:	Desaturation time. The time needed for the body to eliminate the nitrogen taken up during diving.
Gas switching:	The act of changing from one breathing gas to another.
Max depth:	Maximum depth attained during the dive.
MOD:	Maximum Operating Depth. This is the depth at which the partial pressure of oxygen (ppO_2) reaches the maximum allowed level (ppO_2max). Diving deeper than the MOD will expose the diver to unsafe ppO_2 levels.
Multigas:	Refers to a dive in which more than one breathing gas is used (air and/or Nitrox).
Nitrox:	A breathing mix made of oxygen and nitrogen, with the oxygen concentration being 22% or higher.
NO FLY:	Minimum amount of time the diver should wait before taking a plane.
No deco time:	This is the time that you can stay at the current depth and still make a direct ascent to the surface without having to perform mandatory decompression stops.
O_2:	Oxygen.
O_2%:	Oxygen concentration used by the computer in all calculations.
P Factor:	Personalization factors, which allow the user to select between the standard decompression algorithm (P0) and an increasingly more conservative one (P1, P2).
ppO_2:	Partial pressure of oxygen. This is the pressure of the oxygen in the breathing mix. It is a function of depth and oxygen concentration. A ppO_2 higher than 1.6bar is considered dangerous.
ppO_2max:	The maximum allowed value for ppO_2. Together with the oxygen concentration it defines the MOD.
Switch depth:	The depth at which the diver plans to switch to a higher oxygen concentration mix while using the multigas option.
S.I.:	Surface interval.

1.2. OPERATING MODES

The functions of the Smart computer can be grouped into two categories, each corresponding to a specific mode of operation:

- watch mode: Smart is dry on the surface. In this mode you can use it as a normal watch. You can also change settings, review your logbook, use the dive planner, see remaining desaturation after a dive, download to PC and much more;
- dive mode: Smart monitors depth, time, temperature and performs all decompression calculations; dive mode itself can be broken down into 4 sub categories:
  - pre-dive (Smart is on the surface but actively monitoring ambient pressure, so that it can begin to calculate a dive the instant it is submerged below 1.2m/4ft);
  - dive;
  - surfacing (Smart is on the surface at the end of a dive; dive time calculation is halted but if the diver submerges within three minutes the dive is resumed including the time spent on the surface);
  - post-dive (after the three minutes of surfacing mode, Smart closes the logbook and reverts to a display showing desaturation time, no-fly time and surface interval; this lasts until the desaturation and the no-fly time both have been reduced to zero).

1.3. USER-REPLACEABLE BATTERY

Smart uses a CR2430 user-replaceable battery. See section 4.2.1 for instructions on how to replace it. Good quality batteries should suffice for approx 200-300 dives, depending on the usage of the backlight and the temperature of the water. Diving in cold water, usage of the backlight and of the beeper increases battery consumption.

The display alerts you of the status of the battery. The three possible situations are described as follows:

- battery symbol not visible: the remaining battery charge is adequate for diving;
- steady battery symbol on the display: there is enough charge for a few more dives, but you should consider replacing the battery at the next opportunity;
- blinking battery symbol on the display (surface only): the battery is too weak for diving. Smart will not function as a dive computer and will not turn on if submerged.

The level of the battery charge can also be found on the "INFO" page (see section 2.8).

1.4. CONNECTING SMART TO A PC OR MAC

To connect Smart to a PC or Macintosh computer, use the optional clip and the USB cable and Dive Organizer to download your dives to a PC or Divers' Diary to download your dives to a Mac. Both software programs can be downloaded from www.mares.com.

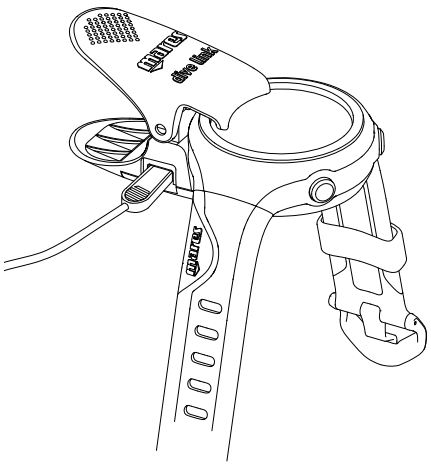

1.5. BUTTON OPERATION

Smart has 2 buttons, labelled **UP/ENTER** and **DOWN/ESC**. Each button can be pressed and released to perform one function (**up** and **down**) and pressed and held for one second to perform a different function (**enter** and **esc**). We'll refer to them as **UP** and **DOWN** button in the remainder of this manual.

On the surface pressing and releasing either button allows to scroll through menus, settings and values. Pressing and holding the **UP** button enters into a menu or confirms a setting, while pressing and holding the **DOWN** button exits from a menu and goes up one level.

During the dive, the **UP** button modifies the top row (depth information) whereas the **DOWN** button modifies the lower right corner of the display. From the main watch display and in dive mode, press and hold the **DOWN** button (◀≡) to activate the backlight.

An overview of the button function both in surface mode and during a dive is presented here below.

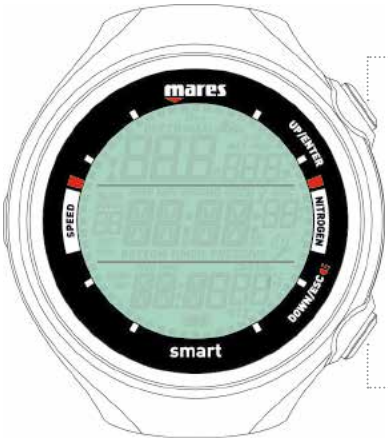

	PRESS	PRESS AND HOLD
WATCH	Scroll up or increase by 1	Enter a submenu or confirm a setting
DIVE	Modify top row	Reset Stopwatch (Multigas only: - Activate gas switch process - Confirm gas switch)

	PRESS	PRESS AND HOLD
WATCH	Scroll down or decrease by 1	From time of day display: backlight From all others: go back one level
DIVE	Modify bottom row	Backlight

SURFACE MODE

press

press and hold

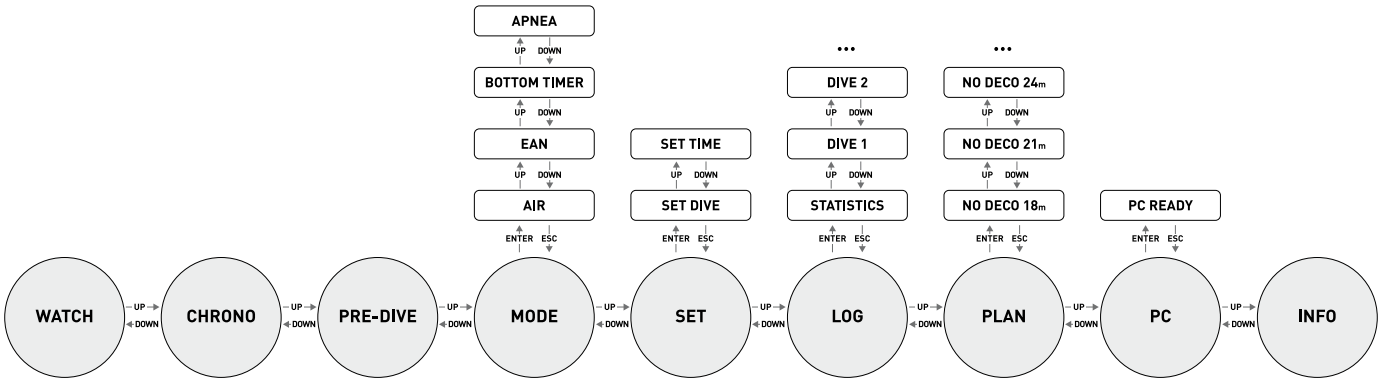

DIVE MODE

press

press and hold

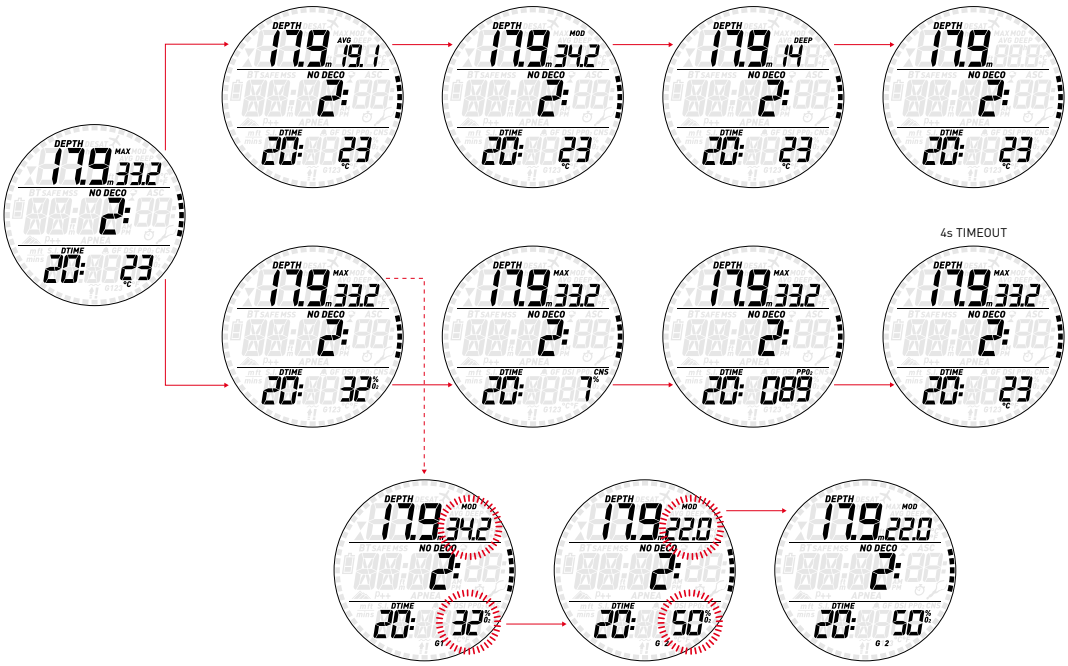

1.6. WATCH DISPLAY

The watch display is the "home" display of Smart. In this mode, the time of day is shown in the middle row of the display while date, temperature, seconds, wake-up time and second time can be displayed at the bottom by pressing the **DOWN** button. Note that the temperature reading will be affected by your body heat while you are wearing the watch. A growing or diminishing ring of 60 dots around the perimeter of the display represents the seconds.

When the wake-up time is displayed, pressing and holding the **UP** button turns the wake-up alarm on or off.

When the second time is displayed, pressing and holding the **UP** button switches main time and second time.

• 2. MENUS, SETTINGS AND FUNCTIONS

This chapter describes in detail all menus, setting and functions of the Smart dive computer.

From the time of day display, pressing the **UP** button allows you to scroll through the following sequence of menus (note that once inside the menu loop, pressing the **DOWN** button scrolls through the menus in reverse sequence):

- **CHROnO**: allows you to operate Smart like a normal stopwatch;
- **PrE dIVE**: places Smart in the ready-to-dive mode;
- **MOdE**: allows you to set the computer to air, nitrox or bottom timer mode;
- **SEt**: allows you to view and change all settings relative to the dive computer;
- **LOG**: allows you to access the detailed history of the dives performed;
- **PLAN**: allows you to plan dives as a function of depth based on your current nitrogen load;
- **PC**: allows you to download dives to a PC or Mac
- **INFO**: allows you to view information about software and hardware of your Smart.

The **pre-dive** mode puts the computer in a ready-to-dive mode and ensures that Smart starts to monitor the dive as soon as a depth of 1.2m/4ft is reached. If you start the dive without putting Smart into **pre-dive** mode, it will start to monitor the dive automatically but with a delay of up to 20 seconds from immersion.

The pre-dive display shows p factor and altitude settings, time of day and surface interval since the last dive. If Nitrox is set, it will show the O_2 percentage and the corresponding MOD.

NOTE
- If you remain in pre-dive for longer than 3 minutes without pressing any button, Smart will revert to normal watch operation.
- It is recommended to put Smart into pre-dive before submerging. Not doing so can lead to a delay of up to 20s in Smart monitoring the dive.

2.1. CHROnO

Press and hold the **UP** button to enter this menu. The middle row now features a stopwatch while the time of day has moved to the bottom row. Press the **UP** button to start and stop the time, then press the **DOWN** button to reset the time to zero. Press and hold the **DOWN** button to exit from the stopwatch function (this stops and resets the stopwatch if it was running or stopped at a non-zero value upon exiting).

The stopwatch features also a split-time function: by pressing the **DOWN** button while the stopwatch is running, the time itself will freeze while **SPL** blinks in the top row and the stopwatch continues in the background. Every time you press the **DOWN** button the split time will refresh with the new value. Press and hold the **DOWN** button to exit the split-time mode. Note that while in split-time mode, the **UP** button has no function.

2.2. PrE dIVE

Press and hold the **UP** button to enter this menu and put Smart into the ready-to-dive mode.

2.3. MOdE

Here you can define the type of gas you will be breathing during the dive (air or enriched air nitrox, including multigas). You can also set Smart to bottom timer (**BT**), in which case Smart will show only time, depth and temperature: it will not carry out any decompression calculation and it will not show any warnings and alarms. You can set Smart also to **APNEA**, which in essence is a bottom timer with special features dedicated to apneists.
Press the **UP** or **DOWN** button to scroll through the four possible options (**AIR**, **EAN**, **BT** or **APNEA**), then press and hold the **UP** button to select it.

AIR is the equivalent of setting **EAN** to 21% and a ppO_2max of 1.4bar, but simplifies the display a bit by not showing the CNS (its value however is calculated in the background and if needed the 75% warning and the 100% alarm are triggered).
When selecting **EAN**, you are taken to a submenu in which you can define the percentage of oxygen in the mixture ($\%O_2$) and the maximum value of oxygen partial pressure (ppO_2max) for up to three breathing mixes. The maximum possible value for the ppO_2max is 1.6bar. Most training agencies recommend not to exceed a value of 1.4bar.

Once inside this menu, press the **UP** or **DOWN** button to change the O_2% and observe how this affects the maximum operating depth (MOD). Then press and hold the **UP** button to move on to the ppO_2max and use the **UP** or **DOWN** button to change the value, again noticing how this affects the MOD. Press and hold the **UP** button again to save the setting.

This leads you to the **G2 OFF** screen. Press and hold the **DOWN** button to exit the menu or go to section 3.5 to read about diving with more than one gas.

⚠ WARNING

- Diving with Nitrox may only be attempted by experienced divers after proper training from an internationally recognized agency.
- Before every dive and after changing the tank, you must make sure that the set oxygen concentration in Smart corresponds to the oxygen concentration in the tank. Setting the wrong oxygen concentration can lead to serious injury or death.

2.4. SEt

Smart's **SEt** menu allows you to change settings. Once inside this menu, press the **UP** or **DOWN** button to scroll between two submenus: **SEt dIVE**, where you can set parameters pertaining to the dive, and **SEt tIME**, where you can set parameters pertaining to time and date.
Press and hold the **UP** button to enter a menu, press the **UP** or **DOWN** button to scroll up and down between available options or to increase or decrease the value of a setting. Then press and hold the **UP** button to confirm the change in setting. Press and hold the **DOWN** button to go up one level in the menu tree.

MENU	*Description*
SEt dIVE	
- **LIGHt**	Allows you to set the duration after which the backlight turns off automatically. You can set this between 1 and 10 seconds.
- **P FACt**	Allows you to choose between the standard algorithm (**P0**) and an increasingly more conservative one (**P1**, **P2**).
- **ALt**	Allows you to set the algorithm into altitude mode when diving in mountain lakes.
- **WAtR**	Allows you to choose between salt (1.025kg/l) and fresh (1.000kg/l) water or **EN13319** (1.0197kg/l), corresponding to the water density used in European Norm 13319.
- **UNItS**	Allows you to choose between metric (**m, °C**) and imperial (**ft, °F**) units.
- **FASt**	Allows you to turn off the dive violation due to uncontrolled ascent. This is for dive instructors only, who may find themselves in such a situation because of their teaching requirements.
- **DEEp**	Allows you to activate or deactivate the visualization of deep stops.
- **tEMp**	Allows you to define whether the temperature is displayed in the top right or bottom right corner of the display.
- **ALRM**	Allows you to turn on or off all audible alarms of Smart.
- **ErASE**	Allows you to reset the nitrogen saturation to zero, thereby erasing the effects of a previous dive. This is only for people who plan to lend their computer to another diver who has not performed a dive within the last 24 hours.
SEt tIME	Allows you to set the time format, time and date, wake-up alarm and second time.

2.4.1. SEt dIVE

2.4.1.1. LIGHt (BACKLIGHT)

Smart has a backlight which can be activated in case of low ambient light. The backlight is activated by pressing and holding the **DOWN** button. During a dive, the backlight will stay on for the duration defined in this menu. You can choose between 1 and 10 seconds.

> **NOTE**
> - The backlight consumes battery energy: the longer the backlight stays on, the less your battery will last.
> - If the **low battery** warning is activated, the backlight will be disabled.

In surface mode, the backlight can be activated by pressing and holding the **DOWN** button. The backlight will stay on for 6 seconds, unless you go into any menu, in which case it will stay on until you return to the pre-dive display or after one minute of no button operation.

2.4.1.2. P FACt (P FACTOR)

Smart allows you to set an additional personal safety factor for those circumstances in which you want to be especially cautious, such as after a long period of inactivity or when planning a strenuous dive. In this menu you can choose between the standard algorithm (**P0**), a more conservative version (**P2**) or an intermediate one (**P1**). On the pre-dive, post-dive, logbook and planner displays, P1 is displayed with p+, P2 with p++ and P0 is indicated by the absence of symbols.

> **NOTE**
> The choice of **p factor** will be reflected in the dive planner.

2.4.1.3. ALt (ALTITUDE)

Atmospheric pressure is a function of altitude and of weather conditions. This is an important aspect to consider for diving, because the atmospheric pressure surrounding you has an influence on uptake and subsequent release of nitrogen. Above a certain altitude, the decompression algorithm has to change in order to account for the effect of the change in atmospheric pressure. When diving in a mountain lake, find out what the altitude is and choose the altitude range in Smart within the four available options:

- **A0**: from sea level to approximately 700m/2300ft;
- **A1**: from approximately 700m/2300ft to approximately 1500m/4900ft ;
- **A2**: from approximately 1500m/4900ft to approximately 2400m/7900ft;
- **A3**: from approximately 2400m/7900ft to approximately 3700m/12100ft;
- We do not recommend diving at altitudes above 3700m / 12100ft. If you do, set Smart to **bottom timer** and find appropriate altitude dive tables.

On the pre-dive, post-dive, logbook and planner displays, A1 through A3 are indicated with the mountain symbol filled with 1, 2 or 3 segments while A0 is indicated by the absence of symbols.

> ⚠ **WARNING**
> Diving in mountain lakes without first setting Smart to the proper altitude setting can cause severe injury or death.

2.4.1.4. WAtR (WATER)

You can set the computer for **FRESH** water, **SALt** water or **EN13319** calibration, depending on where you intend to dive. Setting the wrong water type entails an error in depth measurement of 1-3% (e.g. at a depth of 30m/100ft, a computer set to salt water will show 29m/97ft in fresh water whereas a computer set to fresh water will show 31m/103ft in salt water). Note that this does not affect the proper functioning of the computer, since the computer performs all of the calculations based purely on pressure measurements.

2.4.1.5. UNItS

You can choose between metric (depth in meters, temperature in °C) and imperial units. (depth in feet, temperature in °F).

2.4.1.6. FASt (FAST ASCENT)

A fast (uncontrolled) ascent is defined as one in which a speed of 12 m/min / 40ft/min or higher was maintained over more than two thirds of the way up. This applies to dives deeper than 12m/40ft only. In such an event, due to the potential of harmful bubble formation, Smart locks the computer for 24 hours in order to discourage you from diving again. In this menu, you have the option to disable the locking up of the computer in the event of an uncontrolled ascent.

> ⚠ **WARNING**
> - An uncontrolled ascent increases your risk of decompression sickness (DCS)
> - This feature is intended for very experienced divers only, such as dive instructors, who take full responsibility for the consequences of turning off this function.

2.4.1.7. ALRM (ALARMS)

In this menu you can disable audible alarms.

> ⚠ **WARNING**
> Disabling audible alarms can lead you into potentially dangerous situation and could result in serious injury or death.

2.4.1.8. ErASE (ERASE DESATURATION)

Smart allows you to reset the desaturation in the computer. Any tissue saturation information from a recent dive will be reset to zero and the computer treats the next dive as a non-repetitive dive. This is useful when the computer is loaned to another diver who has not dived in the last 24 hours.

> ⚠ **WARNING**
>
> Diving after having reset the desaturation is extremely dangerous and is very likely to cause serious injury or death. Do not reset the desaturation unless you have a valid reason to do so.

In order to prevent accidental desaturation reset, you must enter the security code once you decide to proceed with the reset. The security code is 1234.

After entering the security code you will get a confirmation of the successful completion of the operation.

2.4.2. SEt tIME

This menu allows you to set the time format, time, date, wake-up alarm and second time (t2). Scroll through the options by pressing either button. Press and hold the **UP** button to edit an option, then press either button to modify the blinking value, then press and hold the **UP** button to confirm the new setting.

Smart features a "sleep" mode: in case you don't wear it other than on a dive trip, you can put Smart in sleep mode to reduce battery consumption. To wake up from sleep mode, press either button.

LCD refresh rate

This allows you to switch between a low and a high refresh rate of the display. The default setting is low: this consumes less energy but under very intense light you might see a slight flicker in the display. Setting it to high reduces the flicker but will shorten the battery life by about 30%.

2.5. LOG (LOGBOOK)

Smart can record the profiles of approximately 35 hours of diving, at a sampling rate of 5 seconds. The information can be transferred using the optional USB clip to PC via the Dive Organizer software or to a Mac via the Divers' Diary software. In addition, Smart can show most of the information directly on the display.

When you first enter the logbook menu, you will see a summary of all dives performed to date. In particular, the maximum depth ever reached, the total number of dives, the total number of hours spent underwater and the coldest water temperature recorded.

From here, press the **UP** or **DOWN** button to scroll through all dives in the memory of the computer. Each dive has two or more pages of data. Page 1 has maximum depth of the dive in the upper left corner while minimum temperature and average depth alternate every 2s in the upper right corner. In the center row time in and time out alternate on the left side of the screen followed by a sequential dive counter (1 being the most recent dive). In the bottom left corner is the date of the dive and next to it the oxygen concentration of G1.

Press and hold the **UP** button to view the next page of the dive log, which shows the surface interval prior to the dive alternating with the dive time and **CNS** (alternating between start and end value) in the bottom row. In case more than one gas was used in the dive, information about **G2** and **G3** if applicable is shown alternating with G1 on the first page.

Press the **UP** or **DOWN** button to scroll between the pages of information, press and hold the **DOWN** button to return to the list of the main logbook menu.

2.6. PLAN (DIVE PLANNER)

This function allows you to plan your next dive. Upon entering this menu, the display lists the settings used for the calculation: P Factor and Altitude selections. The bottom row shows a surface interval of 0:00: in case you dived recently, you can enter an additional surface interval between now and when you intend to dive by pressing the **UP** button: the residual nitrogen load will be adapted accordingly. Next press and hold the **DOWN** button to enter the actual dive plan: Smart displays a depth and the corresponding no deco time. In the bottom row it lists the oxygen concentration of G1.

Use the **UP** and **DOWN** buttons to increase/decrease the depth in 3m / 10ft increments

(limited to the MOD of G1) and view the related no deco time. Press and hold the **UP** button to enter deco planning: Smart will add one minute to the no deco time and show the corresponding deco obligation. Now use the **UP** and **DOWN** buttons to modify the dive time and view how this affects the deco calculation. Press and hold the **DOWN** button to return to the no deco dive planner. From here either choose a different depth and repeat a deco plan or press and hold the **DOWN** button to exit the dive planner.

NOTE
The dive planner is enabled only if either air or nitrox mode is set

2.7. PC

This submenu allows you to download your dive data to a PC or Mac. Press the **ENTER** button and the display will show **PC ready**, symbolizing that Smart is ready to communicate.

2.8. INFO

This submenu provides information about the hardware and software of your Smart and about the status of the battery: **OK** means the battery is good, **LO** means the battery is weak but you can still do a few more dives, and **KO** means the battery is very low and Smart won't function as a dive computer.

• 3. DIVING WITH SMART

3.1. A FEW WORDS ABOUT NITROX

Nitrox is the term used to describe breathing gases made of oxygen-nitrogen mixes with an oxygen percentage higher than 21% (air). Because Nitrox contains less nitrogen than air, there is less nitrogen loading on the diver's body at the same depth as compared to breathing air.

However, the increase in oxygen concentration in Nitrox implies an increase in oxygen partial pressure in the breathing mix at the same depth. At higher than atmospheric partial pressures, oxygen can have toxic effects on the human body. These can be lumped into two categories:

- Sudden effects due to oxygen partial pressure over 1.4bar. These are not related to the length of the exposure to high partial pressure oxygen, and can vary in terms of the exact level of partial pressure they happen at. It is commonly accepted that partial pressures up to 1.4bar are tolerable, and several training agencies advocate maximum oxygen partial pressures up to 1.6bar.
- Long exposure effects to oxygen partial pressures over 0.5bar due to repeated and/or long dives. These can affect the central nervous system, cause damage to lungs or to other vital organs.

Smart keeps you safe with respect to these two effects in the following ways (as long as it is set to either **air** or **nitrox**):

- Against sudden effects: Smart has an MOD alarm set for a user-defined ppO_2max. As you enter the oxygen concentration for the dive, Smart shows you the corresponding MOD for the defined ppO_2max. The default value of ppO_2max from the factory is 1.4bar. This can be adjusted to your preference between 1.2 and 1.6bar. Please refer to section 2.1 for more information on how to change this setting. If Smart is set to air, the ppO_2max is set to 1.4bar by default.
- Against long exposure effects: Smart "tracks" the exposure by means of the CNS% (Central Nervous System). At levels of 100% and higher there is risk of long exposure effects, and consequently Smart will activate an alarm when this level of CNS% is reached. Smart also warns you when the CNS level reaches 75%. Note that the CNS% is independent of the value of ppO_2max set by the user.

3.2. ALARMS

Smart can alert you of potentially dangerous situations. There are five different alarms:

- Ascent rate alarm;
- Exceeding a safe ppO_2/MOD;
- CNS =100%;
- Missed decompression stop;
- Low battery during the dive

⚠ WARNING
When in bottom timer mode, all warnings and all alarms are OFF aside for the low battery alarm.

NOTE
- Alarms are both visual and audible, as described in detail below.
- Ascent rate alarm has priority over other alarms if they are triggered simultaneously.

3.2.1. ASCENT RATE

As soon as depth decreases by more than 80cm / 3ft Smart activates the ascent rate control algorithm and displays the calculated value. This is shown in lieu of the dive time.

⚠ WARNING
A rapid ascent increases the risk of decompression sickness.

If Smart determines an ascent rate of 10m/min / 30ft/min or higher, the fast ascent alarm is triggered: an audible alarm goes off and **SLOW** appears blinking on the display. This persists until the ascent rate is reduced to 10m/min / 30ft/min or less.

If the ascent rate exceeds 12m/min / 40ft/min at a depth below 12m / 40ft, ⚠ blinks as well. If a speed in excess of 12m/min / 40ft/min is maintained for two thirds or more of the depth at which the alarm was first triggered, Smart considers it a dive violation and the display will show the steady ⚠ .

In this case, if the diver attempts a repetitive dive after surfacing, Smart will only function as a depth gauge and timer (bottom timer mode), and will display ⚠ on the screen throughout the dive.

3.2.2. MOD/ppO_2

> ⚠ **WARNING**
> - The MOD should not be exceeded. Disregarding the alarm can lead to serious injury or death.
> - Exceeding a ppO_2 of 1.6bar can lead to sudden convulsions resulting in serious injury or death.

When the diver reaches a depth at which the ppO_2 of the inspired gas exceeds the maximum limit entered in the corresponding setting (from 1.2 to 1.6bar), an audible alarm goes off, the current depth starts to blink and the value of the MOD is shown to the right of the current depth, also blinking.

The alarm persists until the diver has ascended enough for the ppO_2 to return within the set limit.

> ⚠ **WARNING**
>
> When the MOD alarm is triggered, ascend immediately until the alarm stops. Failure to do so could result in serious injury or death.

3.2.3. CNS = 100%

> ⚠ **WARNING**
>
> When the CNS reaches 100% there is danger of oxygen toxicity. Start procedure to terminate the dive.

Oxygen toxicity exposure is tracked on Smart by means of the CNS% based on currently accepted recommendations for exposure limits. This toxicity is expressed as a percentage value which ranges from 0% to 100%. When the value reaches 75%, an alarm goes off and the CNS value blinks on the screen. Additionally the CNS becomes the default item in the lower right corner: if you call up other information after 8 seconds the CNS appears again. Ascend to shallower depth to decrease oxygen loading and consider terminating the dive.

When the oxygen toxicity level approaches 100% the alarm is repeated for 5 seconds in one-minute intervals after the first occurrence and for as long as the value of CNS stays at or above 100%. Consider terminating the dive immediately!

> ⚠ **WARNING**
>
> Diving with oxygen toxicity at levels of 75% or greater may put you into a potentially hazardous situation, which could result in serious injury or death.

3.2.4. MISSED DECOMPRESSION STOP

> ⚠ **WARNING**
>
> Violating a mandatory decompression obligation may result in serious injury or death.

If you ascend above the decompression stop depth by more than 0.3m (1ft), a downward pointing triangle appears, an audible alarm goes off and both the current depth and the depth of the deco stop start blinking. This alarm remains active until you return to the correct depth.

> ⚠ **WARNING**
> - When the missed deco stop alarm is triggered, desaturation of the simulated tissue compartments is halted and resumes only when the diver returns to the correct stop depth.
> - Never ascend above the displayed decompression stop depth.

3.2.4.1. MISSED DECO STOP MODE

If the stop depth is exceeded by more than 1m (3ft) for more than three minutes, Smart considers it a dive violation and the display will show ⌛.

In this case, if the diver attempts a repetitive dive after surfacing, Smart will function only as a depth gauge and timer (bottom timer mode), and it will display ⌛ on the screen.

3.2.5. LOW BATTERY

If Smart detects that the battery power level is safe for diving but without much reserve left, it will show the steady battery symbol on the display.

3.3. DISPLAY INFORMATION

Upon immersion, if Smart was set to pre-dive, it will immediately start monitoring the dive. Otherwise, it will turn on automatically within 20 seconds of having reached a depth of 1.2m/4ft.

The following information is shown:

- current depth
- max depth
- no deco time (or depth and duration of deepest stop and total ascent time in case of decompression dives)
- dive time
- temperature
- nitrogen saturation bar graph

By pressing the **UP** button, you can modify the information displayed in the upper row. At each button press, the screen cycles through, max depth, average depth, MOD (nitrox only), deep stop (if activated and if calculated to be present), and an empty field.

By pressing the **DOWN** button, you can modify the information displayed in the bottom row. At each button press, the screen cycles through temperature, oxygen percentage, CNS, ppO_2,

time of day (in lieu of the dive time; the time of the day has a 4-second time out after which the dive time is displayed again) and an empty field, in which case the dive time is shown inclusive of seconds.

> **NOTE**
> The position on the display of the temperature can be customized in the SEt DIVE menu.

In case of an ascent, the **speed** in m/min or ft/min is displayed in lieu of the dive time.

The **depth** is given in 10cm resolution until 99.9 meters, after which it is given in 1m resolution. When the depth is displayed in feet, the resolution is always 1 foot. At a depth shallower than 1.2m/4ft, the display shows ---. Maximum possible depth is 150m/492ft.

The **dive time** is displayed in minutes. If during the dive you ascend to the surface, the time spent on the surface will only be counted if you descend again below 1.2m/4ft within 3 minutes. This allows for brief periods of orientation. While on the surface, the time will not show as progressing but it is running in the background. As soon as you submerge, the time will resume, including the time spent on the surface.

The **no deco time** is calculated in real time and updated continuously. Maximum displayed no deco time is 99 minutes. If you remain at depth beyond a no deco time of zero minutes, you will enter into decompression: you can no longer make a direct ascent to the surface and Smart displays a **MANDATORY** decompression stop. Instead of a no deco time, it shows you the depth and duration of the deepest stop and the total ascent time (**ASC**), which includes each decompression stop and the time required to travel the vertical distance to the surface at a rate of 10m/min / 33ft/min. **ASC** does not include the duration of deep stops.

DEEP, **DECO** and **SAFETY** stops:

- **DEEP** stops are generated as you approach the no deco limit. You can either have one 2-minute stop or two 1-minute stops. **DEEP** stops are **NOT** mandatory. Deep stops are displayed to the right of the current depth.

Upon reaching the optimum range for carrying out a deep stop (+/- 1m /3ft of the displayed depth), the deep stop itself will be shown in the top right corner with the label **DEEP** blinking, and a countdown timer appears to indicate the progress of the stop. Deep stops can be deactivated in a dedicated settings menu.

- **DECO** stops are generated progressively as you stay down beyond the no deco time. **DECO** stops are **MANDATORY**. For **DECO** stops, since the duration is a function of the exact depth, only the minutes are shown. During a decompression stop, the following symbols may appear:
  - ▼▲: optimal range for the decompression stop;
  - ▼: above decompression stop depth, descend immediately!

- A **SAFETY** stop is generated as soon as the depth of the dive exceeds 10m / 33ft. It has a duration of 3 minutes and it is carried out between depths of 6m / 20ft and 3m / 10ft at the end of a dive prior to surfacing. Such stop is **NOT** mandatory but **HIGHLY RECOMMENDED**.

> ⚠ **WARNING**
> During all dives, perform a safety stop between 3 and 6 meters/10 and 20 feet for 3 minutes, even if no decompression stop is required.

The **nitrogen bar graph** is on the right side of the display. It represents nitrogen saturation in the leading tissue compartment. The bar graph is made of five segments, which gradually fill during the dive. The more black segments you see, the closer to the no deco limits you are. As you enter a situation of mandatory decompression stop, all segments will be black.

During a surface interval, the segments will gradually turn off as Smart tracks the offgassing of your tissues.

Ascent rate: in presence of a depth change in excess of 80cm / 3ft, Smart calculates the corresponding ascent speed and displays in place of the dive time, for the duration of the ascent.

3.4. AFTER THE DIVE

Upon returning to the surface, Smart first goes into the so-called surfacing mode. This mode allows you to resume your dive after a brief period of orientation. The screen shows a 3-minute countdown.

If you submerge again before the 3-minute countdown is over, the dive time will resume from where it left off, including the time spent on the surface. If you do not submerge before the end of the countdown, Smart considers the dive finished, records the data to the logbook and reverts to the so-called post-dive mode.

The post-dive screen shows two sets of information, alternating in 4s intervals. One contains:

- The remaining desaturation time (**DESAT**): this is calculated by the decompression model in the computer. Any dive started while there is remaining desaturation on your computer is considered a repetitive dive, meaning that Smart accounts for the pre-existing nitrogen load in your body.
- The no-fly time (**NO FLY**): this is the time during which an exposure to the reduced pressure inside the cabin of an airplane could cause decompression sickness. Smart employs, as recommended by NOAA, DAN and other agencies, a standard 12-hour (no-deco non-repetitive dives) or 24-hour (deco and/or repetitive dives) countdown. Hence you may find a situation in which the desaturation time is shorter than the no-fly time. This is simply the consequence of the desaturation time being calculated by the algorithm based on the actual dive profile, while the no-fly time is an accepted standard in the diving industry. Since the real effect of flying after diving has never been fully investigated, this approach fits with our philosophy.

> ⚠ **WARNING**
> Flying while Smart displays **NO FLY** can result in serious injury or death.

- The surface interval (**S.I.**): this is displayed from the moment the dive is closed (3 minutes after surfacing) for as long as there is remaining desaturation or no-fly time on the computer.
- In case of a dive violation, the corresponding symbol (⚠, ⌛) is shown.

The other contains a condensed log of the last dive: maximum and average depth in the top row, dive time and set O_2% in the bottom row. In addition, the bar graph shows the calculated nitrogen load in the leading tissue. You can use this to gauge your progress in getting rid of nitrogen as the surface interval grows. Smart continues to perform decompression-related calculations (nitrogen release), for as long as there is desaturation time left.

3.5. DIVING WITH MORE THAN ONE GAS MIXTURE

⚠ WARNING

- Diving with more than one gas mixture represents a much higher risk than diving with a single gas mixture, and mistakes by the diver may lead to serious injury or death.
- During dives with more than one gas mixture, always make sure you are breathing from the tank that you intend to breathe from. Breathing from a high oxygen concentration mix at the wrong depth can kill you instantly.
- Mark all your regulators and tanks so that you cannot confuse them under any circumstance.
- Before each dive and after changing a tank, ensure that each gas mixture is set to the correct value for the corresponding tank.

Smart enables you to use up to three gas mixtures during the dive (air and Nitrox only). The three mixtures are labeled G1, G2 and G3 and must be in ascending order of oxygen content, i.e. G1 has the lowest oxygen concentration, G2 an intermediate value, and G3 has the highest oxygen concentration of the three. If you are diving with only two mixtures, you will be utilizing tanks G1 and G2.

⚠ WARNING

It is not possible to switch to a gas at a depth at which the oxygen partial pressure for that gas is greater than the set maximum value.

NOTE

- If you dive using just one gas, select G1 and deselect the other two.
- For dives with two gases, select G1 and G2 and deselect the third.
- When enabling G2 and G3, you must first define G2 and then G3.
- You cannot activate G3 without first having activated G2.
- G2 cannot have an oxygen percentage higher than G3.
- If you set G2 to OFF, G3 will automatically be set to OFF also.
- The MOD for G2 and G3 is the switch depth for the corresponding gas. This is what Smart uses for its calculation, alarms and suggested switch points.

3.5.1. SETTING MORE THAN ONE GAS

The characteristics of the gases must be entered in the computer before the dive. It will then be your responsibility to tell Smart which gas is currently being used during the various phases of the dive.

To use multiple gases, you will need to enable the gases and set the oxygen percentage and the ppO_2max for each one. This is done in the same way as for G1, with the difference that for G2 and G3 you can turn a gas **ON** or **OFF**. Keep in mind that the MOD for G2 and G3 is the depth at which Smart will prompt you to perform the gas switch (see section 3.5.2 below). To enable G2 press the **UP** button from the **G2 OFF** display. You will now see **G2 ON**, a value of oxygen concentration, ppO_2 and MOD. Proceed as you would for G1 until you get to the **G3 OFF** screen. Either press and hold the **DOWN** button if you have finished setting gases, or press the **UP** button to advance to the **G3 ON** display and setting of G3.

3.5.2. SWITCHING GAS

Smart always begins the dive with G1, which has the lowest percentage of oxygen. When during the ascent you reach the depth corresponding to the MOD of G2, Smart sounds an audible signal and the oxygen concentration of G1 starts to blink in the lower right corner.

Press the **UP** button while this indication is blinking to initiate the gas switch: the oxygen percentage of G2 starts to blink in lieu of that of G1, and in the top right corner the MOD of G2 is displayed, also blinking.

Press and hold the **UP** button to confirm the switch to G2: the set oxygen concentration will be displayed steadily in the lower right corner of the screen, and within 20 seconds the ascent time is updated to reflect the higher oxygen concentration in the breathing gas.

If you press the **UP** button while G2 is blinking, the next available gas in the list will be displayed instead. This will be G1 if only two gases are set or if you are deeper than the MOD of G3, or G3 if you have set three gases and are shallower than the MOD of G3.

NOTE

- Smart will allow the change only if the depth is shallower than the MOD corresponding to the set ppO_2max.
- Smart will not allow the gas switch if you are deeper.
- The automatic blinking of the oxygen concentration of G1 lasts only for 20 seconds. You can however initiate the gas switch at any time by pressing and holding the **UP** button when the oxygen concentration is displayed in the lower right corner, then switch to G2 as long as your depth allows the gas to be activated.
- The same process is repeated when you approach the MOD for G3 with G2 blinking instead of G1
- If you have set G1, G2 and G3 and have not switched from G1 to G2, once you reach the MOD for G3 the oxygen concentration of G1 will again blink to alert you of the possibility of switching gas.

3.5.3. SPECIAL SITUATIONS

3.5.3.1. SWITCHING BACK TO A GAS MIXTURE WITH LOWER OXYGEN CONCENTRATION

There may be situations in which you have to switch back to a gas with lower oxygen concentration than what you are currently breathing. This can happen for instance if you want to descend deeper than the MOD for the current gas, or if for instance you have run out of gas in G2 during the decompression. To do so, simply press the **DOWN** button until the oxygen concentration is displayed in the lower right corner, then press and hold the **UP** button to initiate the gas switch. From here on the procedure is the same as described in 3.5.2.

3.5.3.2. SUBMERGING BELOW THE MOD AFTER A GAS SWITCH

If after having switched to a gas mixture with a higher oxygen concentration you inadvertently drop again below the MOD for that mixture, the MOD alarm will immediately go off. Either switch back to a gas mixture suited for that depth, or ascend above the MOD for the gas mixture you are breathing from.

3.6. BOTTOM TIMER MODE (BT)

When Smart is set to **BT** mode, it will only monitor depth, time and temperature, and will not carry out any decompression calculation. Maximum displayed dive time in gauge mode is 999 minutes. You can only switch to bottom timer mode if the computer is completely desaturated. All audible and visual alarms, other than the low battery alarm, are turned off.

> ⚠ **WARNING**
>
> Dives in bottom timer mode are performed at your own risk. After a dive in bottom timer mode you must wait at least 24 hours before diving using a decompression computer.

During a dive in bottom timer mode, the following information is displayed:

- current depth
- max depth
- stopwatch
- dive time
- temperature
- in case of an ascent: ascent speed (in m/min or ft/min).

Press the **UP** button to toggle between max depth, average depth, and an empty field. Press the **DOWN** button to bring up the time of day in lieu of the dive time (the display reverts back to dive time after 4 seconds) or to show the dive time inclusive of seconds.
From any other display, pressing and holding the **UP** restarts the stopwatch. If also the average depth is displayed, pressing and holding the **UP** button resets also the average depth.

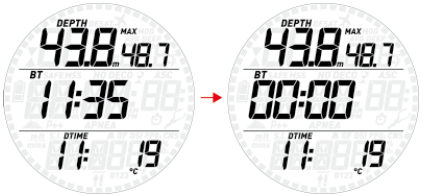

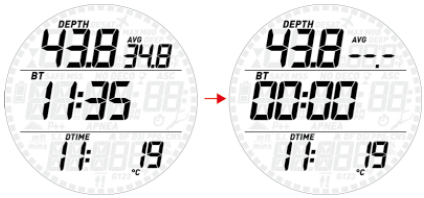

3.6.1. DIVE VIOLATION INDUCED BOTTOM TIMER MODE

The following violations can occur during an Air or Nitrox dive:

- Uncontrolled ascent.
- Missed deco stop.

In case of a violation, Smart will restrict the use of Air and Nitrox mode for 24 hours, and will only allow operation in bottom timer mode.

3.7. APNEA MODE

Smart features an apnea mode with dedicated features specifically for breath hold divers. In apnea, we differentiate between immersion and dive session. An immersion is the individual trip below the water surface.
The dive session is a group of immersions performed in sequence without exiting the apnea mode.

> ⚠ **WARNING**
>
> The practice of apnea exposes divers to different hazards from those associated with scuba diving. The diver should be aware of these hazards and understand how to avoid them.

> ⚠ **WARNING**
>
> Do not practice apnea within 24 hours of having performed a scuba dive.

3.7.1. SETTINGS

Go into the **MODE** menu and from here select **APNEA** then press and hold the **UP** button to confirm your choice. This will automatically lead you into the settings menu for apnea diving. Press and hold the **DOWN** button to exit if you don't need to change any of the settings. Else scroll through the available settings pressing either button. To edit a setting, press and hold the **UP** button, then press either button to modify the setting, then press and hold the **UP** button again to confirm the change. The available settings are:

AL.beep

This allows you activate or deactivate all warnings at once.

Dive time

If active, when the dive time reaches the set limit an audible alarm will go off and the dive time will blink on the display.

Surf int

If active, when the surface interval reaches the set limit an audible alarm will go off and the surface interval will blink on the display.

Max

If active, upon reaching the depth defined in the setting an audible alarm will go off and the depth will blink on the display.

Int

This allows you to set a depth interval at which a short audible sequence is activated. For instance, if you set a depth interval of 5m/15ft, the audible sequence will go off at 5m/15ft, 10m/30ft, 15m/45ft etc.

3.7.2. USING SMART ON AN APNEA DIVE

Put Smart into **PRE DIVE** so that as soon as you submerge past 1.2m/4ft it will start monitoring your dive. Smart will show the current depth in the top row, the dive time in minutes and seconds in the middle row and the water temperature in the bottom row.
Press the **DOWN** button and the time of day will appear for a few seconds to the left of the temperature. Press and hold the **DOWN** button to activate the backlight.

3.7.2.1. SURFACING BETWEEN IMMERSIONS

When returning to a depth of less than 0.8m/3ft, Smart switches to surface mode. The display will show the maximum depth of the dive that just ended in the top row, its duration in the middle row, and the surface time in minutes and seconds in the bottom row together with the minimum temperature recorded during the immersion. The number to the right of the max depth is the sequential counter of the immersions in the dive sequence.

By pressing the **UP** button the display switches to maximum depth of the dive session in the top row, maximum dive time of the session in the middle row and minimum temperature during the session in the bottom row.

Press and hold the **UP** button to exit apnea mode. Do this only at the end of your dive session so that your immersions are all logged together (see section 3.7.3 for information about the logbook in apnea mode). Note that Smart will exit the apnea mode automatically after 30 minutes without immersion.

3.7.3. LOGBOOK IN APNEA MODE

Smart separates scuba dive logs from apnea logs, hence there is a dedicated summary page for each. As you enter the logbook function, the two alternate every 4 seconds. The apnea summary shows max depth in the top row, longest dive time in the middle row, number of sessions and minimum temperature in the bottom row.

Upon pressing the **UP** button, individual logs will be shown in chronological sequence. Scuba dives are described in section 2.5. Apnea dives are grouped in sessions, and for each session there are two summary pages: the first shows the maximum depth of the session, the time the session started and the date, in addition to a sequential counter;

Press and hold the **UP** button to reach the second summary page, which shows the maximum depth and the number of immersions of the session in the top row, the time the session started and the sequential counter in the middle row, the longest dive time and the minimum temperature of the session in the bottom row.

Press and hold the **UP** button to enter the session and see max depth and sequential counter of the immersion at the top, dive time in the middle, surface interval prior to immersion and minimum temperature of the immersion at the bottom.

Press either button to view the details of other immersions within the same session or press and hold the **DOWN** button to exit the session log.

3.7.4. SWITCHING FROM APNEA TO SCUBA

It is commonly accepted that scuba diving after apnea diving is safe, but we take a slightly more conservative approach. Smart evaluates your apnea activity and imposes a restriction before you can switch the dive computer from apnea to scuba based on your max depth in apnea in the preceding 24 hours:

- up to 5m/15ft: no restriction
- up to 10m/33ft: 2-hour restriction since the last apnea dive
- up to 20m/66ft: 4-hour restriction since the last apnea dive
- up to 30m/100ft: 6-hour restriction since the last apnea dive
- over 30m/100ft: 8-hour restriction

• 4. TAKING CARE OF SMART

4.1. TECHNICAL INFORMATION

Operating altitude:

- with decompression – sea level to approximately 3700m/12100ft
- without decompression (gauge mode) – at any altitude

Decompression model: RGBM Mares-Wienke (10 tissues)

Depth measurement:

- Max displayed depth: 150m/492ft
- Resolution: 0.1m until 99.9m and 1m at depth deeper than 100m. Resolution in ft is always 1ft
- Temperature compensation of the measurement between -10 °C to +50 °C / 14 °F to 122 °F
- Accuracy from 0 to 80m/262ft: 1% ±0.2m/1ft

Temperature measurement:

- Measurement range: -10 °C to +50 °C / 14 °F to 122 °F
- Resolution: 1 °C / 1 °F
- Accuracy: ± 2 °C / ± 4 °F

Clock: quartz clock, time, date, dive time display up to 999 minutes

Oxygen concentration: adjustable between 21% and 99%, ppO_2max range between 1.2 and 1.6bar

Logbook memory: 35 hours of dive profile at 5-second sampling rate

Operating temperature: -10 °C to +50 °C / 14 °F to 122 °F

Storage temperature: -20 to 70 °C / -4 to 158 °F

Display:

- Diagonal: 31 mm / 1 1/4"
- Mineral glass

Power supply:

- CR2430 user-replaceable battery
- battery life: 800-1000 dives in one year, 200-300 dives over two years, 50 dives over 3 years. If sleep mode is activated between dive sessions, 300 dives over 6 years. Actual battery duration depends on the usage of the backlight and the water temperature.

4.2. MAINTENANCE

The depth accuracy should be verified by an authorized Mares dealer every two years Aside from that, Smart is virtually maintenance free. All you need to do is rinse it carefully with fresh water after each dive (avoid any chemical products) and replace the battery when needed. To avoid possible problems with your Smart, the following recommendations will help assure years of trouble free service:

- avoid dropping or jarring your Smart;
- do not expose Smart to intense, direct sunlight;
- do not store Smart in a sealed container, always ensure free ventilation.

NOTE
If you notice signs of moisture on the inner wall of the mineral glass, take your Smart immediately to an authorized Mares service center.

⚠ WARNING
The mineral glass is not exempt from scratches resulting from improper use.

⚠ WARNING

Do not blow compressed air onto Smart, because it could damage the pressure sensor area.

4.2.1. REPLACING THE BATTERY IN SMART

⚠ WARNING

REPLACING THE BATTERY IS A VERY DELICATE OPERATION, AND WHEN PERFORMED BY AN INEXPERIENCED PERSON MOST LIKELY WILL LEAD TO A FLOODED COMPUTER. WE STRONGLY RECOMMEND THAT YOU VISIT AN AUTHORIZED MARES CENTER. MARES DECLINES ALL RESPONSIBILITY FOR ANY DAMAGE CAUSED BY REPLACING THE BATTERY.

NOTE

Do not discard the old battery in the environment. Mares adopts a policy of respect for the environment, and urges use of the appropriate separated waste collection service.

⚠ WARNING

When changing the battery, the o-ring must be replaced. The Smart battery kit contains a high quality CR2430 battery and a new o-ring. All computer o-rings are inspected individually for integrity.

Follow these steps and refer to the pictures:

a) Remove the center screw as shown, then remove the strap. Note that only one side of the strap needs to be removed. We recommend removing the one without buckle.

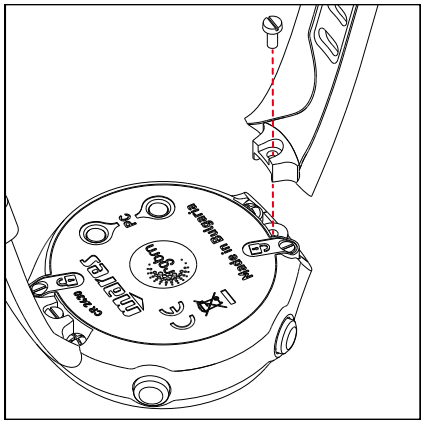

b) Remove the two screws near the padlock symbols. These hold the battery cover in place.

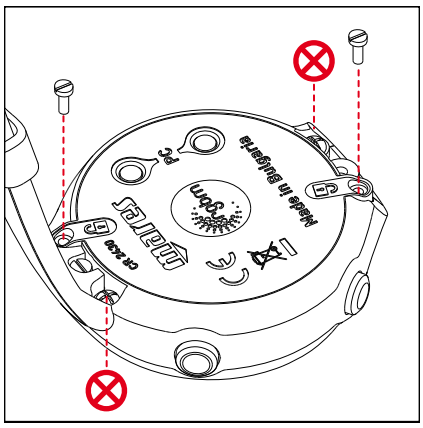

NOTE

Do not remove the screws denoted with ⊗!

c) Use a small flat-head screwdriver to pry open and lift the cover on the side where you removed the strap.

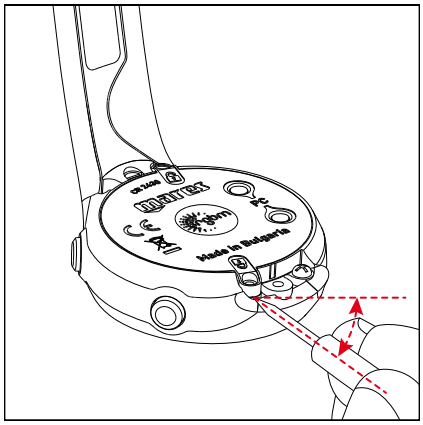

d) Remove the cover then remove the o-ring. Discard the o-ring.

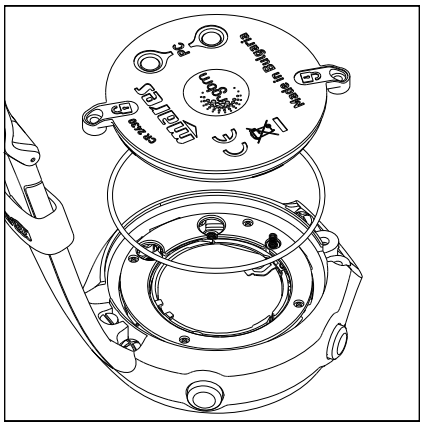

e) Remove the battery by prying it loose with a small flat-head screwdriver.

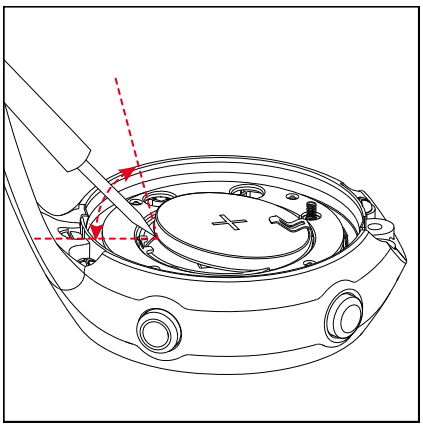

f) Replace the battery with the new one from the kit. The battery should click in place. Make sure to respect the correct polarity of the battery: the "+" has to be facing outwards.

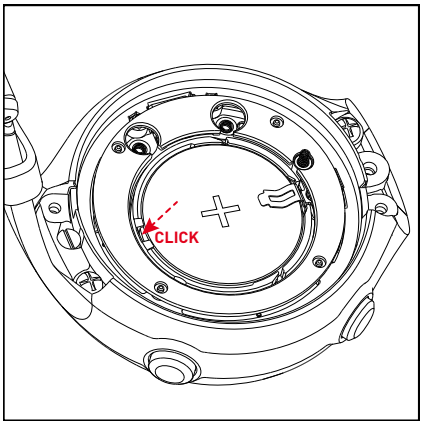

g) Position the new o-ring from the kit in the groove around the battery, ensuring that it sits towards the outer edge of the groove.

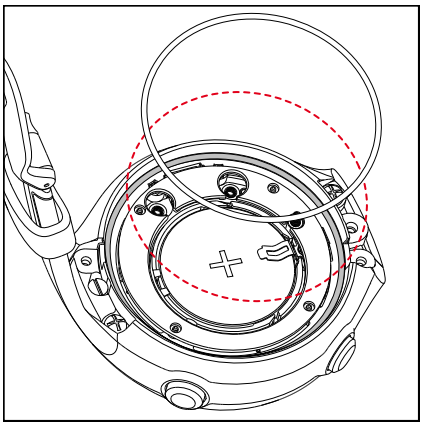

h) Position the cover onto the watch case and press it down evenly. Ensure that in the area of the screws the cover touches the watch case.

NOTE

Do not lubricate the o-ring! Lubrication causes the o-ring to twist when the cover is put over it, causing the watch to flood.

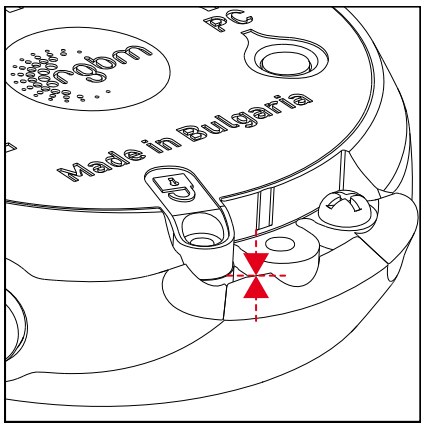

i) Keep the cover pressed onto the watch case while hand tightening the two screws. Don't use excessive force while tightening. Ideal torque is 12 N cm / 17 oz-in.
j) Reposition the strap which was removed in step a). For best results put a drop of Loctite 331 onto the thread of the screw. Hand tighten without using excessive force. Ideal torque is 15 N cm/21 oz-in.

⚠ WARNING

Mares reserves the right to refuse to provide service under the warranty if the maintenance instructions are not followed.

4.3. WARRANTY

Mares products are guaranteed for a period of two years subject to the following limitations and conditions:

The warranty is non-transferable and applies strictly to the original purchaser.

Mares products are warranted free from defects in materials and workmanship: components that, upon technical inspection, are found to be defective, will be replaced free of charge.

Mares S.p.A. declines all responsibility for accidents of any kind that result from tampering or incorrect use of its products.

Any products returned for overhaul or repairs under warranty, or for any other reason, must be forwarded exclusively via the vendor and accompanied with a proof of purchase slip. Products travel at the risk of the sender.

4.4. WARRANTY EXCLUSIONS

Damage caused by water seepage resulting from improper use (e.g. dirty seal, battery compartment closed incorrectly, etc.).

Rupture or scratching of the case, glass or strap as a result of violent impact or blows.

Damage resulting from excessive exposure to elevated or low temperatures.

Damage caused by the use of compressed air to clean the dive computer.

4.5. HOW TO FIND THE PRODUCT SERIAL NUMBER

To see the product serial number, enter the INFO submenu.

• 5. DISPOSAL OF THE DEVICE

Dispose of this device as electronic waste. Do not throw it away with regular rubbish.

If you prefer, you can return the device to your local Mares dealer.

code 442013 08 - 0.000 - Rev. A - 10/16 - Artbook 13035/16

rgbm®

Algorithm

CE

mares®

Mares S.p.A. - Salita Bonsen, 4 - 16035 Rapallo (Ge) - ITALY - Tel. +39 01852011 - Fax +39 0185 669984
www.mares.com