mares
pure instinct

Smart Apnea Computer

Instruction Manual

• TABLE OF CONTENTS

1. INTRODUCTION **3**
1.1. OPERATING MODES 3
1.2. USER-REPLACEABLE BATTERY 3
1.3. CONNECTING SMART APNEA TO A PC OR MAC 3
1.4. BUTTON OPERATION 3
1.5. WATCH DISPLAY 4
2. MENUS, SETTINGS AND FUNCTIONS **4**
2.1. CHRONO 5
2.2. COUNTDOWN 5
2.3. PRE DIVE 5
2.4. SET 5
2.4.1. SET DIVE 5
2.4.2. SET TIME 7
2.5. LOGBOOK 7
2.6. PC 7
2.7. INFO 7
3. DIVING WITH SMART APNEA **7**
3.1. USING SMART APNEA ON A FREE DIVE 8
3.1.1. SURFACING BETWEEN DIVES 8
3.1.2. LOGBOOK IN FREE DIVE MODE 8
4. TAKING CARE OF SMART APNEA **8**
4.1. TECHNICAL INFORMATION 8
4.2. MAINTENANCE 8
4.2.1. REPLACING THE BATTERY IN SMART APNEA 9
4.3. WARRANTY 10
4.4. WARRANTY EXCLUSIONS 10
4.5. HOW TO FIND THE PRODUCT SERIAL NUMBER 10
5. DISPOSAL OF THE DEVICE **10**

• 1. INTRODUCTION

1.1. OPERATING MODES

The functions of the Smart Apnea computer can be grouped into two categories, each corresponding to a specific mode of operation:

- watch mode: Smart Apnea is dry on the surface. In this mode you can use it as a normal watch. You can also change settings, review your logbook, download to PC and much more;
- dive mode: Smart Apnea monitors depth, time and temperature; dive mode itself can be broken down into 3 sub categories:
  - pre-dive (Smart Apnea is on the surface but actively monitoring ambient pressure, so that it can begin to monitor a dive the instant it is submerged below 1.2m/4ft);
  - dive
  - surfacing: Smart Apnea is on the surface at the end of a dive.

1.2. USER-REPLACEABLE BATTERY

Smart Apnea uses a CR2430 user-replaceable battery. See section 4.2.1 for instructions on how to replace it. Good quality batteries should suffice for approx 200 hours of diving over a two-year time span, depending on the usage of the backlight and the temperature of the water. Diving in cold water, usage of the backlight and of the beeper increases battery consumption.

The display alerts you of the status of the battery. The three possible situations are described as follows:

- battery symbol not visible in the pre-dive and dive display: the remaining battery charge is adequate for diving;
- steady battery symbol on the display (dive and pre-dive): there is enough charge for a few more hours of diving, but you should consider replacing the battery at the next opportunity;
- blinking battery symbol on the display: the battery is too weak for diving. If this happens during a dive, you must not perform any more dives before replacing the battery. If you see the blinking battery symbol on the surface, be aware that Smart Apnea will not function as a dive computer and will not turn on if submerged.

The level of the battery charge can also be found on the "INFO" page (see section 2.6).

1.3. CONNECTING SMART APNEA TO A PC OR MAC

To connect Smart Apnea to a PC or Macintosh computer, use the optional clip and the USB cable and Dive Organizer to download your dives to a PC or Divers' Diary to download your dives to a Mac. Both software programs can be downloaded from www.mares.com.

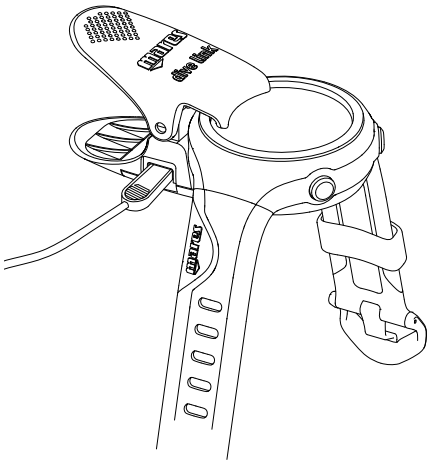

1.4. BUTTON OPERATION

Smart Apnea has 2 buttons, labelled **up/enter** and **down/esc**. Each button can be pressed and released to perform one function (**up** and **down**) and pressed and held for one second to perform a different function (**enter** and **esc**). We'll refer to them as **upper** and **lower** button in the remainder of this manual.

On the surface pressing and releasing either button allows to scroll through menus, settings and values. Pressing and holding the upper button enters into a menu or confirms a setting, while pressing and holding the lower button exits from a menu and goes up one level.

During the dive, the upper button calls up the max depth of the current dive whereas the lower button calls up the time of day. Both appear for 4 seconds only. From the main watch display and in dive mode, press and hold the lower button ( ) to activate the backlight.

An overview of the button function both in surface mode and during a dive is presented here below.

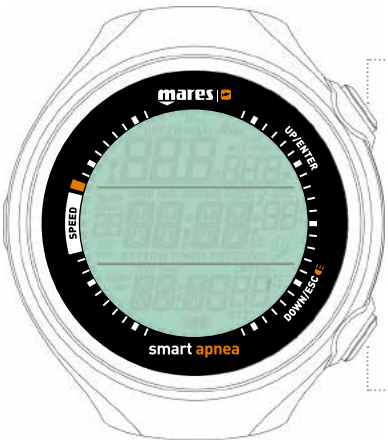

	PRESS	PRESS AND HOLD
WATCH	Scroll up or increase by 1	Enter a submenu or confirm a setting
DIVE	Call up max depth of immersion (4s time out)	

	PRESS	PRESS AND HOLD
WATCH	Scroll down or decrease by 1	From time of day display: backlight From all others: go back one level
DIVE	Call up time of day (4s time out)	Backlight

SURFACE MODE

→ press

- - → press and hold

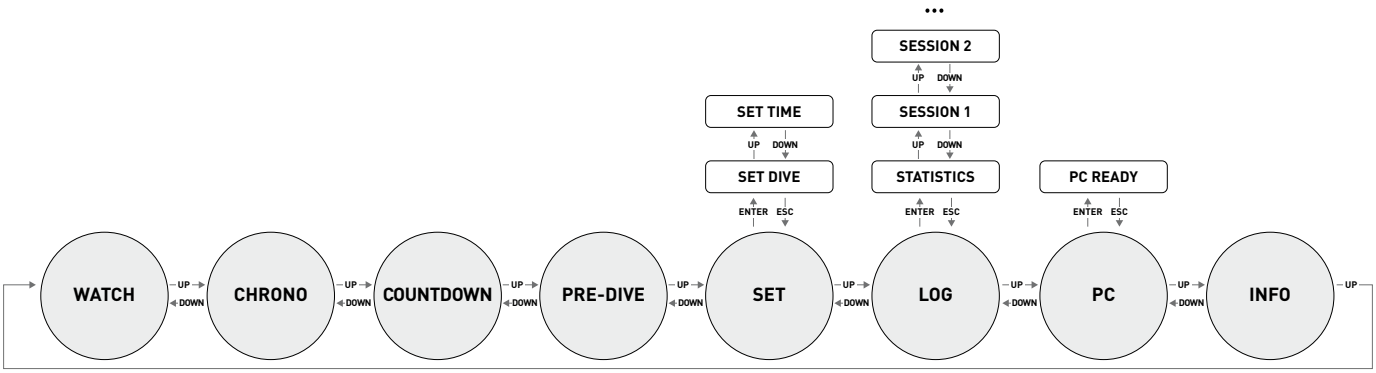

1.5. WATCH DISPLAY

The watch display is the "home" display of Smart Apnea. In this mode, the time of day is shown in the middle row of the display while date, temperature, seconds, wake-up time and second time can be displayed at the bottom by pressing the lower button. Note that the temperature reading will be affected by your body heat while you are wearing the watch. A growing or diminishing ring of 60 dots around the perimeter of the display represents the seconds.

When the wake-up time is displayed, pressing and holding the upper button turns the wake-up alarm on or oF.

When the second time is displayed, pressing and holding the upper button switches main time and second time.

NOTE
At the end of the bottom row sequence there is StOP with setting on or oF. The setting is changed by pressing and holding the upper button while StOP is on the display. When StOP is on, SMART will not start diving even if exposed to 1.2m of depth for a prolonged time. This allows you to perform pool activities like swiming without constantly activating the dive mode.

• 2. MENUS, SETTINGS AND FUNCTIONS

This chapter describes in detail all menus, setting and functions of the Smart Apnea computer.

From the time of day display, pressing the upper button allows you to scroll through the following sequence of menus (note that once inside the menu loop, pressing the lower button scrolls through the menus in reverse sequence):

- **CHROnO**: allows you to operate Smart Apnea like a normal stopwatch;
- **Countdown**: turns Smart Apnea into a single, multilap or continuous countdown timer;
- **PRE dIVE**: places Smart Apnea in the ready-to-dive mode;
- **SEt**: allows you to view and change all settings relating to the dive computer (SEt dIVE) and to the watch (SEt tIME);
- **LOG**: allows you to access the detailed history of the dives performed;
- **PC**: allows you to download dives to a PC or Mac;
- **INFO**: allows you to view information about software and hardware of your Smart Apnea.

The **pre-dive** mode puts the computer in a ready-to-dive mode and ensures that Smart Apnea starts to monitor the dive as soon as a depth of 1.2m/4ft is reached. If you start the dive without putting Smart Apnea into **pre-dive** mode, it will start to monitor the dive automatically but with a delay of up to 20 seconds from immersion.

The pre-dive display shows time of day and temperature. The 4-digit number in the bottom left corner is the set water density without the decimal point. Refer to section 2.3.1 for more information about setting the water density.

NOTE
- If you remain in pre-dive for longer than 3 minutes without pressing any button, Smart will revert to normal watch function.
- It is recommended to put Smart into pre-dive before submerging. Not doing so can lead to a delay of up to 20s in Smart monitoring the dive.

2.1. CHROnO

Press and hold the upper button to enter this menu. The middle row now features a stopwatch while the time of day has moved to the bottom row. Press the upper button to start and stop the time, then press the lower button to reset the time to zero. Press and hold the lower button to exit from the stopwatch function (this stops and resets the stopwatch if it was running or stopped at a non-zero value upon exiting).

The stopwatch features also a split-time function: by pressing the lower button while the stopwatch is running, the time itself will freeze while SPL blinks in the top row and the stopwatch continues in the background. Every time you press the lower button the split time will refresh with the new value. Press and hold the lower button to exit the split-time mode. Note that while in split-time mode, the upper button has no function.

2.2. Countdown

Press and hold the upper button to enter this menu. The middle row now features a count down time (default is 10:00), while the time of day has moved to the bottom row. The top row shows cd to the left and a number to the right (default is 1). This number represents the number of laps during which the countdown timer restarts automatically and it can be set between 1 (default) and 99 or it can be set to continuous (cnt), in which case the timer goes on indefinitely until it is stopped manually.

Press and hold the upper button and the minutes in the middle row will start to blink. Press the upper or lower button to modify the value, then press and hold the top button to confirm the value. Now the seconds start to blink.

Set the value in the same way as you set the minutes, and now LAP and a number will appear in the middle row, blinking. Press the upper button to increase the number, or press the lower button to go directly to cnt. Press and hold the top button to confirm the value and exit the setting mode.
To start the countdown timer, press the top button. Press it again to interrupt the countdown. Press the lower button to reset the time to the set value. If LAP was set to a number greater than 1, the top row will show the current lap number, or cnt.
Whenever the countdown time reaches 00:03, an alarm will go off for 5 seconds. If LAP is set to a number between 2 and 99, at the beginning of the last lap the alarm will continue for 10 seconds.
Press and hold the lower button to exit the countdown menu.

2.3. PRE dIVE

Press and hold the upper button to enter this menu and put Smart Apnea into the ready-to-dive mode.

2.4. SEt

Smart Apnea's **SEt** menu allows you to change settings. Once inside this menu, press either button to scroll between two submenus: **SEt dIVE**, where you can set parameters pertaining to the dive, and **SEt tIME**, where you can set parameters pertaining to time and date.

Press and hold the upper button to enter a menu, then press either button to scroll up and down between available options or to increase or decrease the value of a setting. Then press and hold the upper button to confirm the change in setting. Press and hold the lower button to go up one level in the menu tree.

2.4.1. SEt dIVE

AL.beep

This allows you to activate or deactivate all warnings at once. Note that when Al.beep is set to off, none of the individual alarm menus are shown.

Dive time

If active, when the dive time reaches the set limit an audible alarm consisting of two long beeps (1s each) will go off and the dive time will blink on the display.

Surf int

If active, when the surface interval reaches the set limit an audible alarm consisting of two long beeps (1s each) will go off and the surface interval will blink on the display.

Depth 1-6

Smart Apnea allows you to set up to 6 independent depth alarms. If active, upon reaching the depth defined in the setting an audible alarm consisting of three very short beeps (0.05s each) will go off. For alarm #6 the beeping is continuous until you ascend above the limit and in addition the depth will blink on the display.

Int

This allows you to set a depth interval at which a short audible sequence is activated. For instance, if you set a depth interval of 5m/15ft, the audible sequence, consisting of two short beeps (0.33s each) will go off at 5m/15ft, 10m/30ft, 15m/45ft etc.

Speed ▲

This allows you to set an ascent speed limit above which an alarm will go off. The alarm consists of continuous very short beeps (0.05s each) and the blinking of the speed value.

Speed ▼

This allows you to set a descent speed limit above which an alarm will go off. The alarm consists of continuous very short beeps (0.05s each) and the blinking of the speed value.

Hyd

This allows you to set a time interval after which an alarm consisting of a 4s long beep goes off reminding you to hydrate.

t-FACt

This allows you to define a minimum surface interval duration based on the duration of the previous dive. If you start a dive before this minimum surface interval has elapsed, an alarm consisting of very short beeps will go off for 20 seconds.

The minimum surface interval is defined as the duration of the previous dive multiplied by the t-factor. The t-factor can be set between 1 and 7 in 0.5 increments.

A blinking diver alerts you to the fact that the minimum surface interval has not elapsed yet.

LGHt (Backlight)

Smart Apnea has a backlight which can be activated in case of low ambient light. The backlight is activated by pressing and holding the lower button. During a dive, the backlight will stay on for the duration defined in this menu. You can choose between 1 and 10 seconds.

NOTE
- The backlight consumes battery energy: the longer the backlight stays on, the less your battery will last.
- If the **low battery** warning is activated, the backlight will be disabled.

In surface mode, the backlight can be activated by pressing and holding the lower button while the time of day is displayed. The backlight will turn off after 6 seconds without any button operation, which allows you to turn on the light from the time of day mode then enter into menus, change settings, go into the logbook etc.

WAtR (WATER)

Unlike most scuba and apnea instruments which only allow to choose between fresh water and salt water, in Smart Apnea you can set the water density between 1.000 (freshwater) and 1.050 in 0.001 increments. Default setting is 1.025, which corresponds to the salt water setting in Mares dive instruments.

UN:tS (UNITS)

You can choose between metric (depth in meters, temperature in °C) and imperial units. (depth in feet, temperature in °F).

SAMPLE RAtE

This allows you to change the sampling rate for data acquisition in the logbook between 1s, 0.5s and 0.25s. This setting does not change how the depth is displayed on the screen (always at 1s refresh rate) but it will affect the amount of information available for download to PC or Mac and the accuracy of the max depth value. Changing the sampling rate affects the capacity of the logbook.

2.4.2. SEt tIME

This menu allows you to set the time format, time, date, wake-up alarm and second time (t2). Scroll through the options by pressing either button. Press and hold the upper button to edit an option, then press the upper or lower button to modify the blinking value, then press and hold the upper button to confirm the new setting.

Smart Apnea features a "sleep" mode: in case you don't wear it other than on a dive trip, you can put Smart Apnea in sleep mode to reduce battery consumption. To wake up from sleep mode, press either button.

LCD refresh rate

This allows you to switch between a low and a high refresh rate of the display. The default setting is low: this consumes less energy but under very intense light you might see a slight flicker in the display. Setting it to high reduces the flicker but will shorten the battery life by about 30%.

2.5. LOGBOOK

Smart Apnea can record the profiles of approximately 20 to 30 hours of diving, depending on the numbers of dives per session and the duration of each dive, assuming a sampling rate of 1 second. The information can be transferred using the optional USB clip to PC via the Dive Organizer software or to a Mac via the Divers' Diary software. In addition, Smart Apnea can show most of the information directly on the display.

Refer to section 3.1.2 for details about the on-board logbook.

2.6. PC

This submenu allows you to download your dive data to a PC or Mac. Press and hold the upper button and the display will show **PC ready**, symbolizing that Smart Apnea is ready to communicate.

2.7. INFO

This submenu provides information about the hardware and software of your Smart Apnea and about the status of the battery (two segments inside the battery means the battery is ok, one segment means the battery is low but the watch functions as dive computer, one segment blinking means the battery is too low for use as dive computer).

• 3. DIVING WITH SMART APNEA

Smart Apnea features a free diving mode with dedicated features specifically for breath hold divers. In free diving, we differentiate between dive and dive session. A dive is the individual trip below the water surface. The dive session is a group of dives performed in sequence without exiting the free dive mode.

⚠ WARNING

The practice of free diving exposes divers to different hazards from those associated with scuba diving. The diver should be aware of these hazards and understand how to avoid them.

⚠ WARNING

Do not practice free diving within 24 hours of having performed a scuba dive.

3.1. USING SMART APNEA ON A FREE DIVE

Put Smart Apnea into PRE DIVE so that as soon as you submerge past 1.2m/4ft it will start monitoring your dive. Smart Apnea will show the current depth in the top row, the dive time in minutes and seconds in the middle row and descent and ascent speed in meters per second / feet per second and the water temperature in the bottom row. Press the top button and the max depth of the dive will appear for a few seconds. Press the lower button and the time of day will appear for a few seconds to the left of the temperature. Press and hold the lower button to activate the backlight.

3.1.1. SURFACING BETWEEN DIVES

When returning to a depth of less than 0.8m/3ft, Smart Apnea switches to surface mode. The display will show the maximum depth of the dive that just ended in the top row, the surface interval in the middle row, and the dive time in the bottom row together with the minimum temperature recorded during the dive. Maximum ascent and descent speeds are displayed alternating every few seconds with the dive time. The number to the right of the max depth is the sequential counter of the dives in the session.

By pressing the upper button the display shows for 5 seconds the max depth of the session and the number of dives in the session in the top row, surface interval in the middle row, longest dive in the session alternating with maximum descent and ascent speeds and minimum temperature in the session in the bottom row. Furthermore, in order to better distinguish between dive data and session data, in the latter the second indicators in the upper half of the display perimeter (from 9 o'clock to 3 o'clock) are turned on. Press the lower button and the bottom row will show time of day and max temperature of the dive for a few seconds.

Press the lower button to view the time of day in lieu of the dive time.

Press and hold the upper button to exit free dive mode. Do this only at the end of your dive session so that your dives are all logged together (see section 3.1.2 for information about the logbook in free dive mode). Note that Smart Apnea will exit the free dive mode automatically after 60 minutes without dives.

3.1.2. LOGBOOK IN FREE DIVE MODE

Logbook information is distinguished between overall summary, session summary and individual dives. In order to help you recognize in which state of the logbook you find yourself, the main summary shows all 60 dots around the perimeter of the display lit up, the session data only the upper half, and the individual dives show no dots at all.
Upon entering the logbook, the first screen shows the free dive summary: deepest dive and total number of sessions in the top row, total number of dives in the middle row, longest dive alternating with maximum descent and ascent speeds and minimum temperature in the bottom row.

Upon pressing the upper button, individual logs will be shown in chronological sequence. Free dives are grouped in sessions, and for each session there is a summary page: it shows max depth of the session and number of dives in the session on the top row, date, time of day when the session began and time of day when the session ended (alternating) and number of session in the middle row, longest dive in session alternating with total dive time and maximum descent speed and minimum temperature in session in the bottom row.

Press the upper button to view the next session or press and hold to enter the session: you will see for each individual dive in the session the max depth and sequential counter of the dive at the top, dive time in the middle, surface interval prior to dive alternating with maximum descent and ascent speeds and minimum temperature of the dive at the bottom.

Press the upper or lower button to view the details of the next or previous dive within the same session or press and hold the lower button to exit the session log.

• 4. TAKING CARE OF SMART APNEA

4.1. TECHNICAL INFORMATION

Operating altitude:
At any altitude with automatic atmospheric pressure compensation.

Depth measurement:
- Max displayed depth: 150m/492ft
- Resolution: 0.1m until 99.9m and 1m at depth deeper than 100m. Resolution in ft is always 1ft
- Temperature compensation of the measurement between -10 °C to +50 °C / 14 °F to 122 °F
- Accuracy from 0 to 80m/262ft: 1% ±0.2m/1ft

Temperature measurement:
- Measurement range: -10 °C to +50 °C / 14 °F to 122 °F
- Resolution: 1 °C / 1 °F
- Accuracy: ± 2 °C / ± 4 °F

Clock: quartz clock, time, date, dive time display

Logbook memory: 20-30 hours of dive profile at 1-second sampling rate

Operating temperature: -10 °C to +50 °C / 14 °F to 122 °F

Storage temperature: -20 to 70 °C / -4 to 158 °F

Display:
- Diagonal: 31mm / 1 ¼ inch
- Mineral glass

Power supply:
- CR2430 user-replaceable battery
- battery life: approx. 200 hours of diving over a two-year time span.

4.2. MAINTENANCE

The depth accuracy should be verified by an authorized Mares dealer every two years. Aside from that, Smart Apnea is virtually maintenance free. All you need to do is rinse it carefully with fresh water after each dive (avoid any chemical products) and replace the battery when needed. To avoid possible problems with your Smart Apnea, the following recommendations will help assure years of trouble free service:

- avoid dropping or jarring your Smart Apnea;
- do not expose Smart Apnea to intense, direct sunlight;
- do not store Smart Apnea in a sealed container, always ensure free ventilation.

NOTE
If you notice signs of moisture on the inner wall of the mineral glass, take your Smart Apnea immediately to an authorized Mares service center.

⚠ WARNING
The mineral glass is not exempt from scratches resulting from improper use.

⚠ WARNING

Do not blow compressed air onto Smart Apnea, because it could damage the pressure sensor area.

4.2.1. REPLACING THE BATTERY IN SMART APNEA

⚠ WARNING

REPLACING THE BATTERY IS A VERY DELICATE OPERATION, AND WHEN PERFORMED BY AN INEXPERIENCED PERSON MOST LIKELY WILL LEAD TO A FLOODED COMPUTER. WE STRONGLY RECOMMEND THAT YOU VISIT AN AUTHORIZED MARES CENTER. MARES DECLINES ALL RESPONSIBILITY FOR ANY DAMAGE CAUSED BY REPLACING THE BATTERY.

NOTE

Do not discard the old battery in the environment. Mares adopts a policy of respect for the environment, and urges use of the appropriate separated waste collection service.

⚠ WARNING

When changing the battery, the o-ring must be replaced. The Smart battery kit contains a high quality CR2430 battery and a new o-ring. All computer o-rings are inspected individually for integrity.

Follow these steps and refer to the pictures:

a) Remove the center screw as shown, then remove the strap. Note that only side of the strap needs to be removed. We recommend removing the one without buckle.

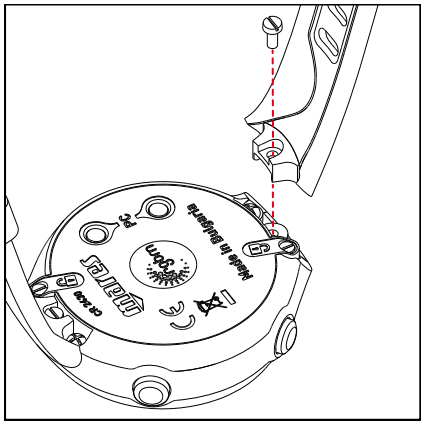

b) Remove the two screws near the padlock symbols. These hold the battery cover in place.

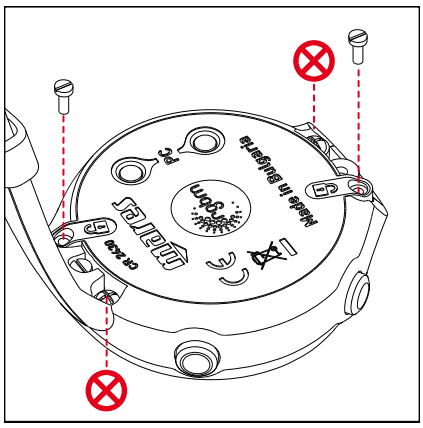

NOTE

Do not remove the screws denoted with ⊗!

c) Use a small flat-head screwdriver to pry open and lift the cover on the side where you removed the strap.

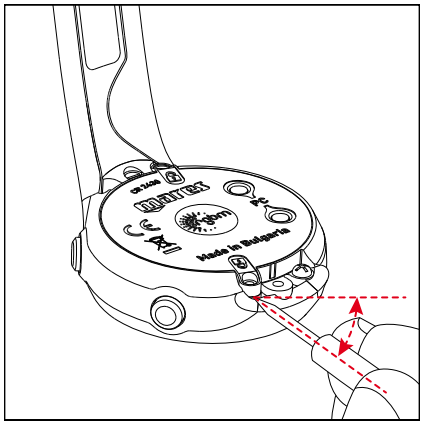

d) Remove the cover then remove the o-ring. Discard the o-ring.

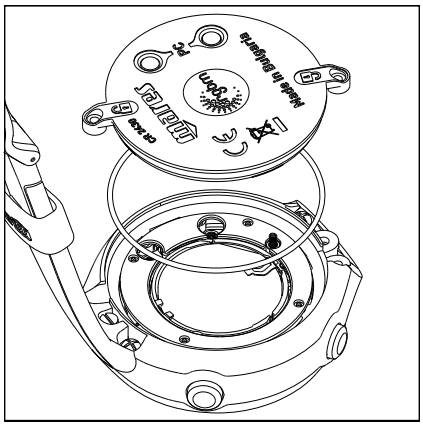

e) Remove the battery by prying it loose with a small flat-head screwdriver.

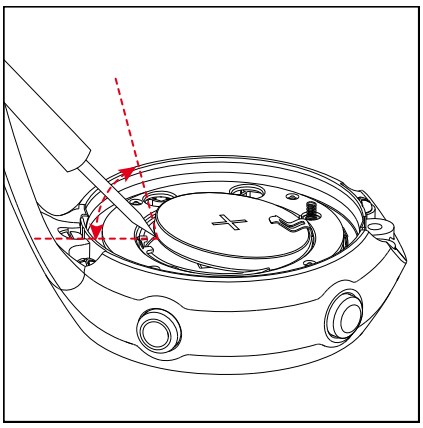

f) Replace the battery with the new one from the kit. The battery should click in place. Make sure to respect the correct polarity of the battery: the "+" has to be facing outwards.

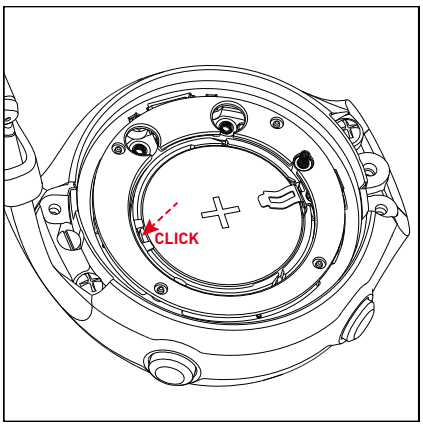

g) Position the new o-ring from the kit in the groove around the battery, ensuring that it sits towards the outer edge of the groove.

NOTE

Do not lubricate the o-ring! Lubrication causes the o-ring to twist when the cover is put over it, causing the watch to flood.

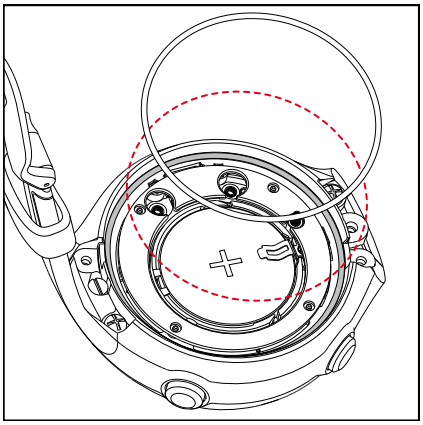

h) Position the cover onto the watch case and press it down evenly. Ensure that in the area of the screws the cover touches the watch case.

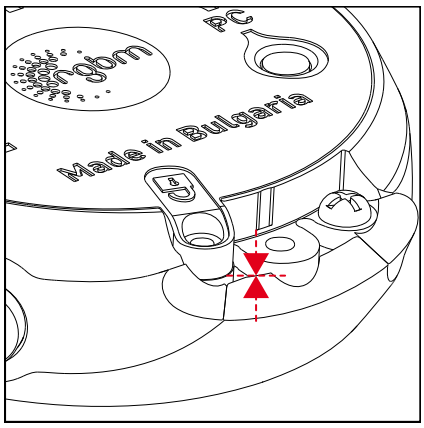

i) Keep the cover pressed onto the watch case while hand tightening the two screws. Don't use excessive force while tightening.
j) Reposition the strap which was removed in step a). For best results put a drop of Loctite 331 onto the thread of the screw. Hand tighten without using excessive force.

> ⚠ **WARNING**
>
> Mares reserves the right to refuse to provide service under the warranty if the maintenance instructions are not followed.

4.3. WARRANTY

Mares products are guaranteed for a period of two years subject to the following limitations and conditions:

The warranty is non-transferable and applies strictly to the original purchaser.

Mares products are warranted free from defects in materials and workmanship: components that, upon technical inspection, are found to be defective, will be replaced free of charge.

Mares S.p.A. declines all responsibility for accidents of any kind that result from tampering or incorrect use of its products.

Any products returned for overhaul or repairs under warranty, or for any other reason, must be forwarded exclusively via the vendor and accompanied with a proof of purchase slip. Products travel at the risk of the sender.

4.4. WARRANTY EXCLUSIONS

Damage caused by water seepage resulting from improper use (e.g. dirty seal, battery compartment closed incorrectly, etc.).

Rupture or scratching of the case, glass or strap as a result of violent impact or blows.

Damage resulting from excessive exposure to elevated or low temperatures.

Damage caused by the use of compressed air to clean the dive computer.

4.5. HOW TO FIND THE PRODUCT SERIAL NUMBER

To see the product serial number, enter the INFO submenu.

• 5. DISPOSAL OF THE DEVICE

Dispose of this device as electronic waste. Do not throw it away with regular rubbish.

If you prefer, you can return the device to your local Mares dealer.

code 44201174 -Rev. A - 0.000- 10/15 - Artbook 11816/15

Mares S.p.A. - Salita Bonsen, 4 - 16035 Rapallo (Ge) - ITALY - Tel. +39 01852011 - Fax +39 0185 669984
www.mares.com